PICTORIAL DIAGRAM

SD/SE4F210

NOTES:

1. COMPONENTS NOT SHOWN IN ACTUAL LOCATIONS
2. WHITE WIRES REPRESENTED AS LIGHT BLUE

PIN	FUNCTION	2000S/XP	EXTREME
1	MANUAL RUN	RED	BROWN
2	L1	BLACK	RED
3	L2	WHITE	BLACK
4	GND	GREEN	GRN/YEL
5	ALARM FEED	ORANGE	YELLOW
6	ALARM RETURN	BLUE	BLUE

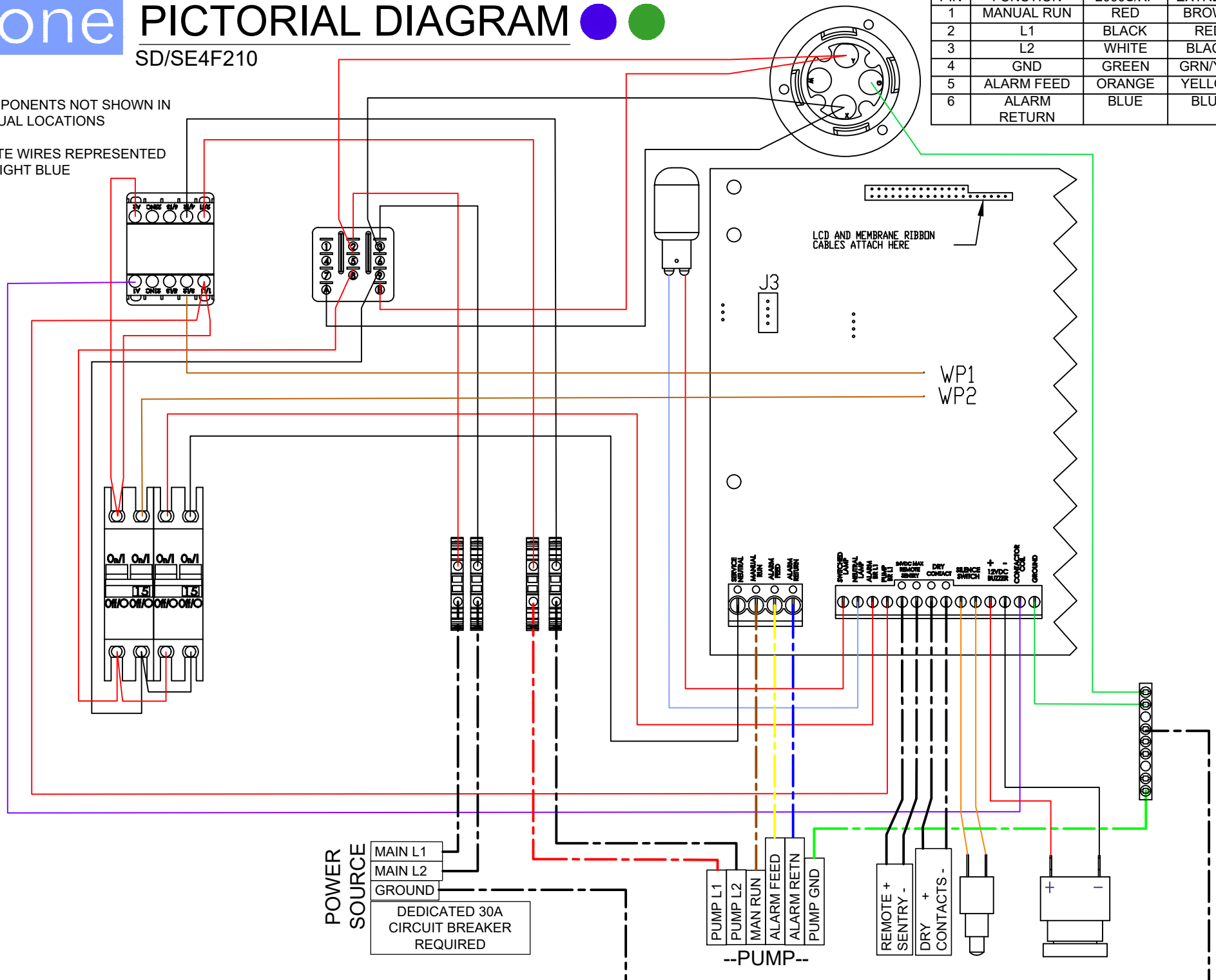

NB0541P02 REV -